Digital Signature

COMPARISON

Let us begin by looking at the differences between conventional signatures and digital signatures.

Inclusion

A conventional signature is included in the document; it is part of the document. But when we sign a document digitally, we send the signature as a separate document.

Verification Method

For a conventional signature, when the recipient receives a document, she compares the signature on the document with the signature on file. For a digital signature, the recipient receives the message and the signature. The recipient needs to apply a verification technique to the combination of the message and the signature to verify the authenticity.

PROCESS

The sender uses a signing algorithm to sign the message. The message and the signature are sent to the receiver. The receiver receives the message and the signature and applies the verifying algorithm to the combination. If the result is true, the message is accepted; otherwise, it is rejected. Figure 1 shows the digital signature process.

Digital signature process

Figure 1 ***Digital signature process***

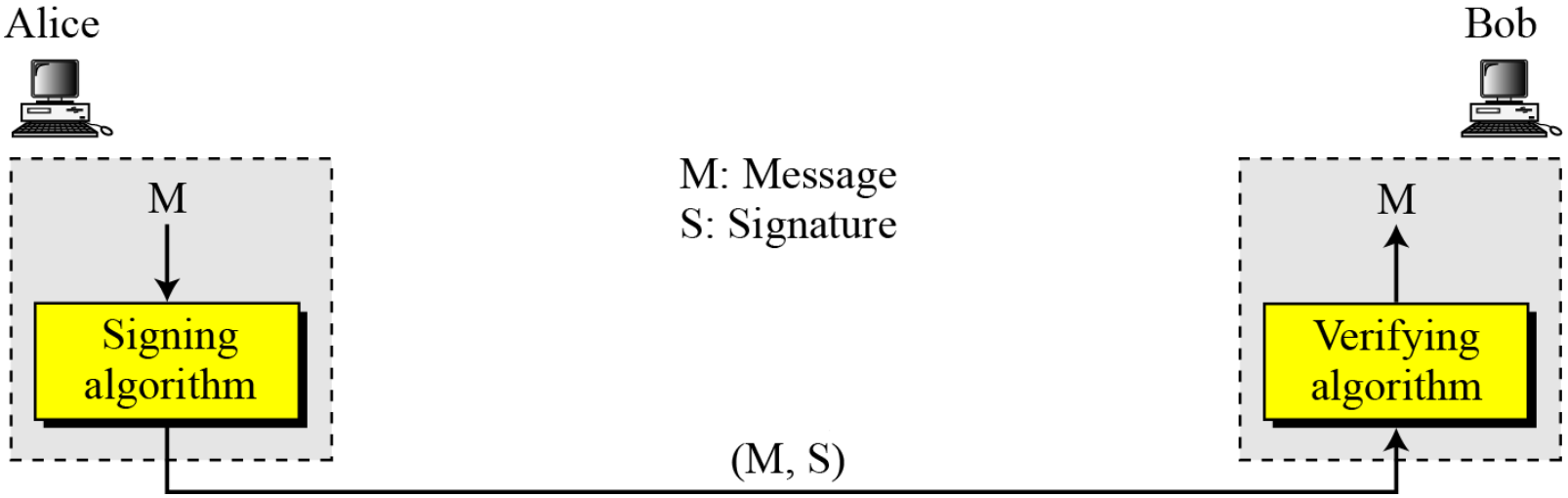

Need for Keys

Figure 2 ***Adding key to the digital signature process***

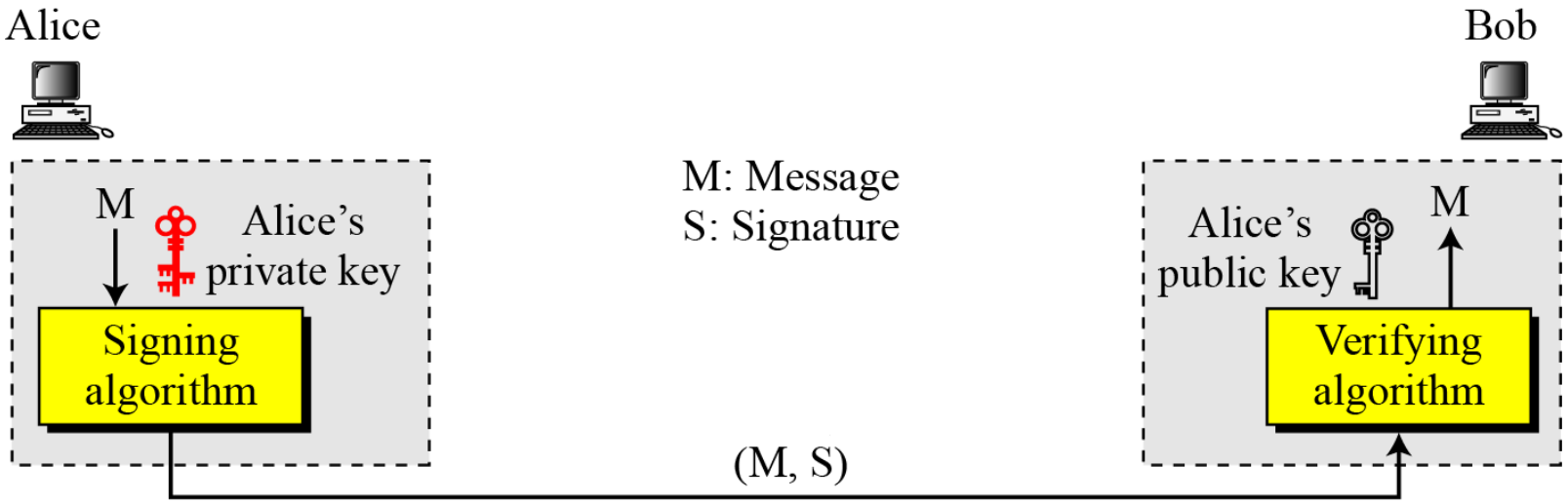

Note

A digital signature needs a public-key system. The signer signs with her private key; the verifier verifies with the signer's public key.

Digital signature process

Note

A cryptosystem uses the private and public keys of the receiver; a digital signature uses the private and public keys of the sender.

Signing the Digest

Figure 3 ***Signing the digest***

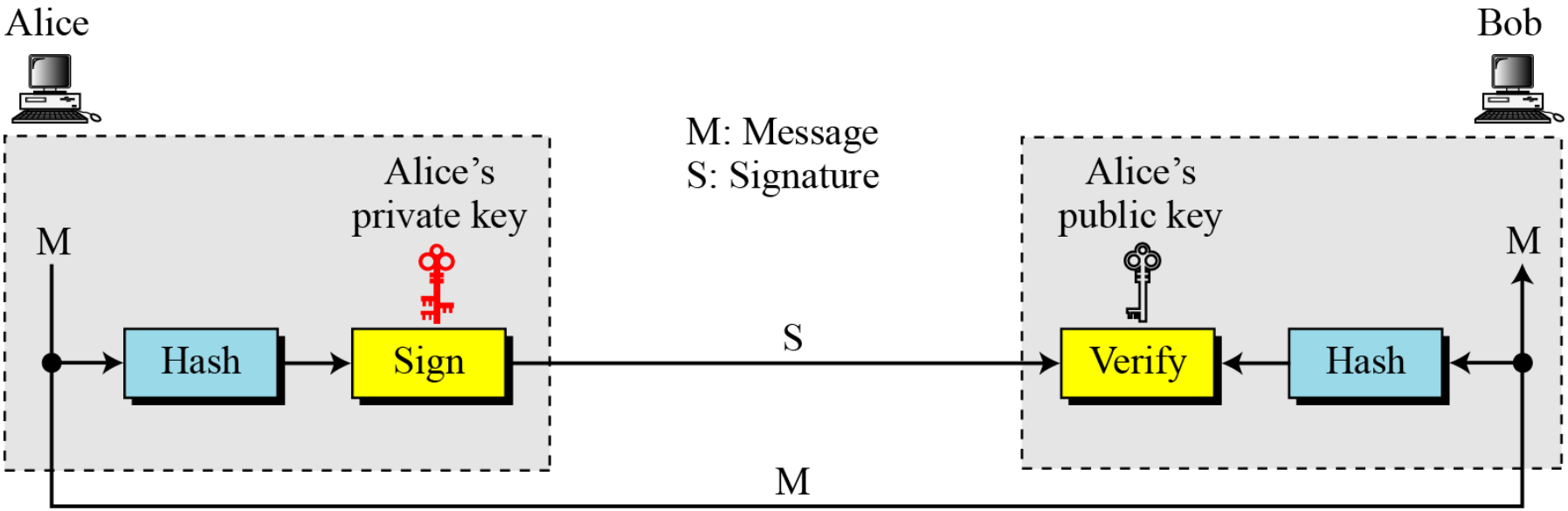

DIGITAL SIGNATURE SCHEMES

Several digital signature schemes have evolved during the last few decades. Some of them have been implemented.

Topics discussed in this section:

1. **ElGamal Digital Signature Scheme**
2. **RSA Digital Signature Scheme**
3. **Digital Signature Standard (DSS)**

1.1 RSA Digital Signature Scheme

Key Generation

Key generation in the RSA digital signature scheme is exactly the same as key generation in the RSA encryption scheme.

Note

In the RSA digital signature scheme, *d* is private; *e* and *n* are public.

1.1 RSA Digital Signature Scheme

Signing and Verifying

Figure 4 ***RSA digital signature scheme***

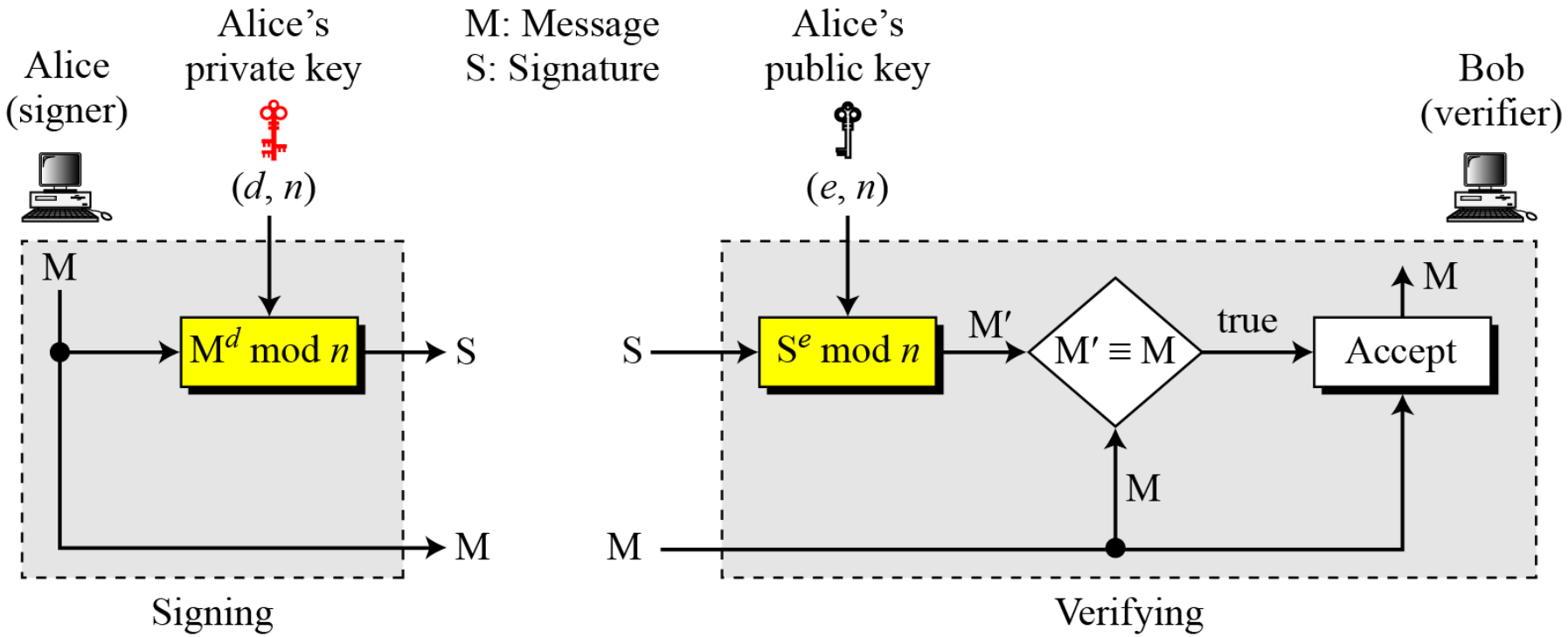

1.1 RSA Digital Signature Scheme

Example 1

As a trivial example, suppose that Alice chooses *p* = 823 and *q* = 953, and calculates *n* = 784319. The value of ϕ(n) is 782544. Now she chooses *e* = 313 and calculates *d* = 160009. At this point key generation is complete. Now imagine that Alice wants to send a message with the value of M = 19070 to Bob. She uses her private exponent, 160009, to sign the message:

$$\text{M: } 19070 \quad \rightarrow \quad S = (19070^{160009}) \bmod 784319 = 210625 \bmod 784319$$

Alice sends the message and the signature to Bob. Bob receives the message and the signature. He calculates

$$M' = 210625^{313} \bmod 784319 = 19070 \bmod 784319 \quad \rightarrow \quad M \equiv M' \bmod n$$

Bob accepts the message because he has verified Alice's signature.

1.2 RSA Signature on the Message Digest

Figure 5 ***The RSA signature on the message digest***

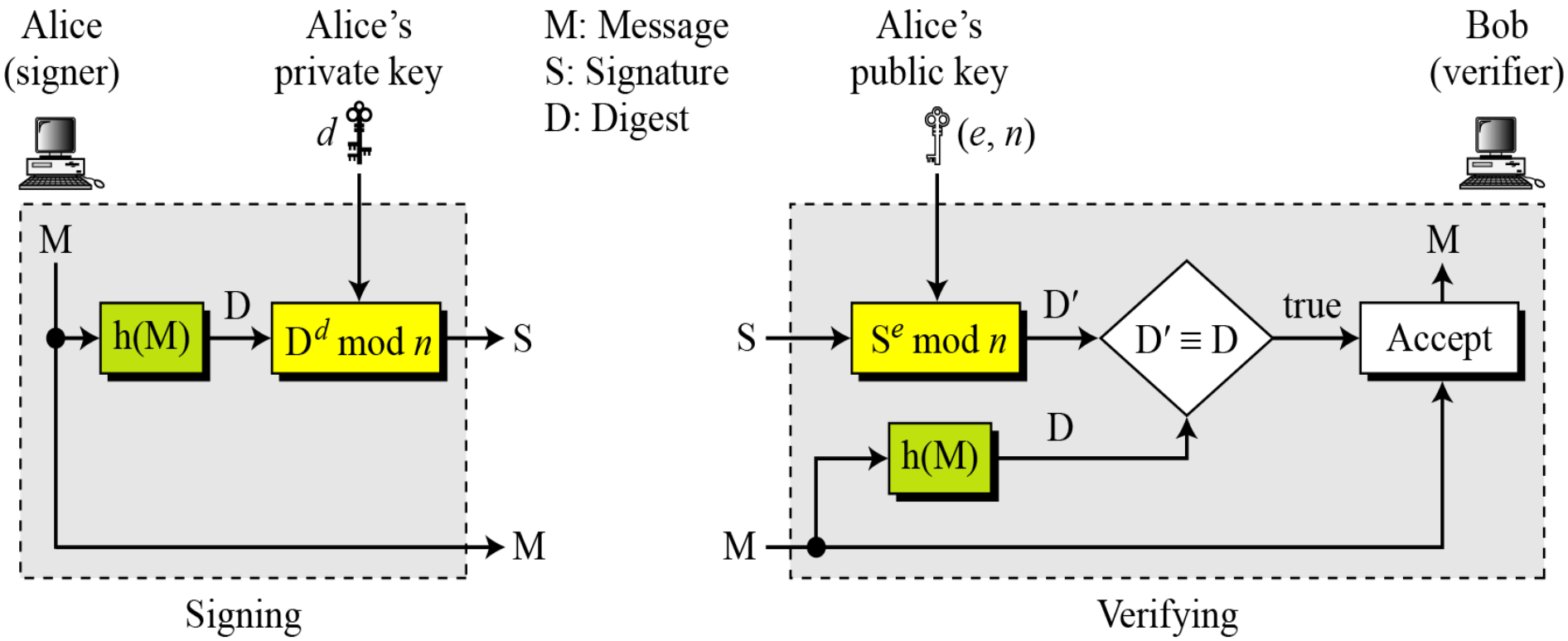

1.2 RSA Signature on the Message Digest

Note

When the digest is signed instead of the message itself, the susceptibility of the RSA digital signature scheme depends on the strength of the hash algorithm.

2. ElGamal Digital Signature Scheme

Figure 6 ***General idea behind the ElGamal digital signature scheme***

S_1, S_2: Signatures
M: Message
(e_1, e_2, p): Alice's public key

d: Alice's private key
r: Random secret

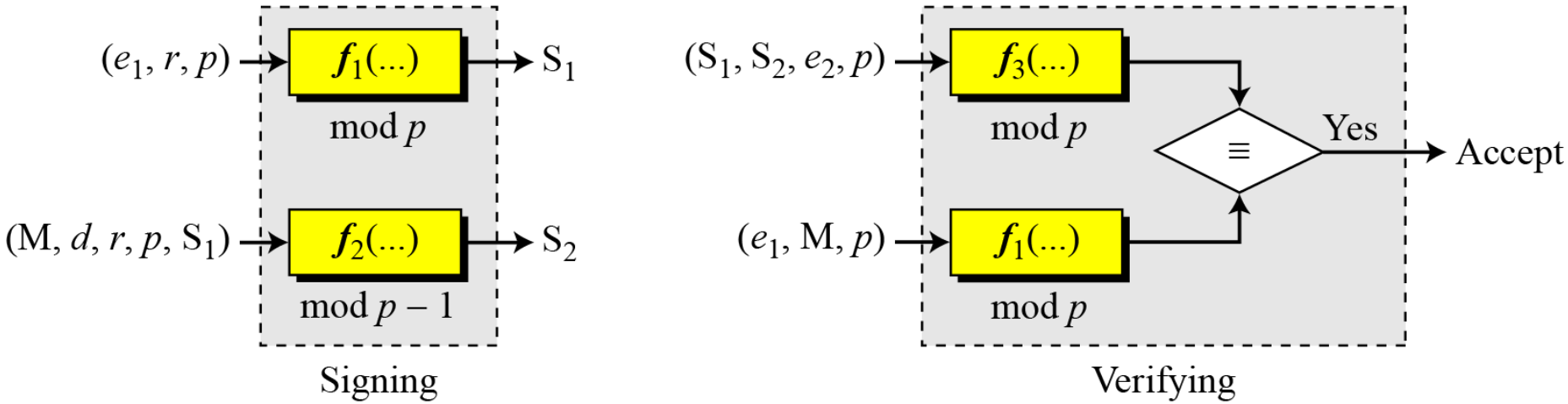

2. ElGamal Digital Signature Scheme

Key Generation

The key generation procedure here is exactly the same as the one used in the cryptosystem.

Note

In ElGamal digital signature scheme, (e_1, e_2, p) is Alice's public key; d is her private key.

2. ElGamal Digital Signature Scheme

Verifying and Signing

Figure 7 ***ElGamal digital signature scheme***

M: Message
S_1, S_2: Signatures
V_1, V_2: Verifications

r: Random secret
d: Alice's private key
(e_1, e_2, p): Alice's public key

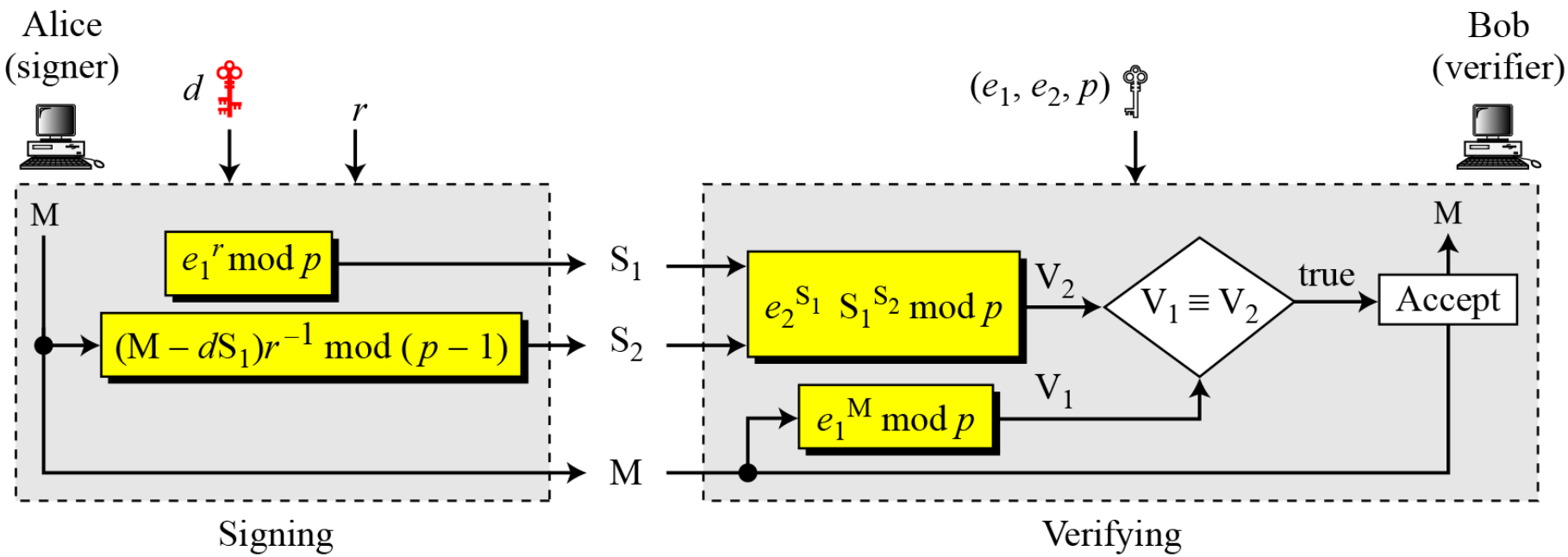

2. ElGamal Digital Signature Scheme

Example 2

Here is a trivial example. Alice chooses *p* = 3119, e_1 = 2, $_d$ = 127 and calculates $e_2 = 2^{127}$ mod 3119 = 1702. She also chooses *r* to be 307. She announces e*1*, e*2*, and *p* publicly; she keeps *d* secret. The following shows how Alice can sign a message.

$$M = 320$$

$$S_1 = e_1{}^r = 2^{307} = 2083 \bmod 3119$$

$$S_2 = (M - d \times S_1) \times r^{-1} = (320 - 127 \times 2083) \times 307^{-1} = 2105 \bmod 3118$$

Alice sends M, S_1, and S_2 to Bob. Bob uses the public key to calculate V_1 and V_2.

$$V_1 = e_1{}^M = 2^{320} = 3006 \bmod 3119$$

$$V_2 = d^{S_1} \times S_1{}^{S_2} = 1702^{2083} \times 2083^{2105} = 3006 \bmod 3119$$

2. ElGamal Digital Signature Scheme

Example 3

Now imagine that Alice wants to send another message, M = 3000, to Ted. She chooses a new *r*, 107. Alice sends M, S_1, and S_2 to Ted. Ted uses the public keys to calculate V_1 and V_2.

$$M = 3000$$

$$S_1 = e_1{}^r = 2^{107} = 2732 \bmod 3119$$

$$S_2 = (M - d \times S_1)\, r^{-1} = (3000 - 127 \times 2083) \times 107^{-1} = 2526 \bmod 3118$$

$$V_1 = e_1{}^M = 2^{3000} = 704 \bmod 3119$$

$$V_2 = d^{S_1} \times S_1{}^S = 1702^{2732} \times 2083^{2526} = 704 \bmod 3119$$

Pr-1. RSA Digital Signature Scheme

Key Generation and Signing Process

- Generate RSA keys with the following parameters: Choose two prime numbers $p = 11$ and $q = 17$. Compute n, $\phi(n)$, and the public and private keys for the RSA signature scheme.
- Sign the message $M = 9$ using the private key.
- Verify the signature using the public key.

Pr-2. ElGamal Digital Signature Scheme

Key Generation and Signature Process

- Bob uses the ElGamal digital signature scheme with prime $p = 23$, generator $g = 5$, and secret key $x = 7$.
- Bob wants to sign the message $M = 13$. He chooses the random number $k = 3$.
- Compute the values r and s for the signature.
- Verify the signature using Bob's public key.

3. Digital Signature Standard (DSS)

Figure 8 ***General idea behind DSS scheme***

S_1, S_2: Signatures
M: Message
(e_1, e_2, p, q): Alice's public key
d: Alice's private key
r: Random secret

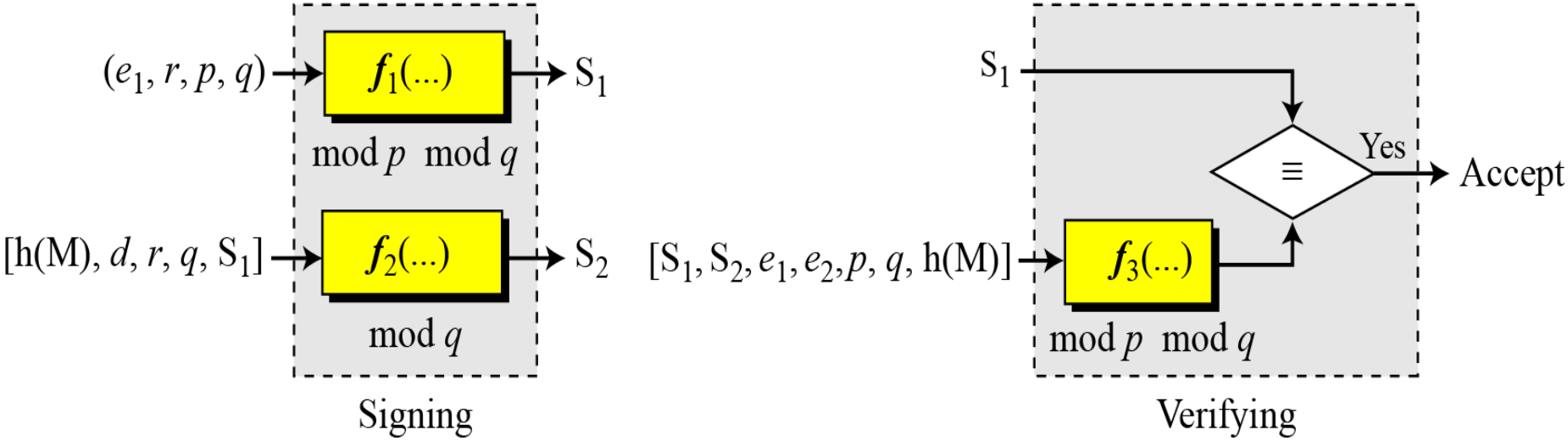

3. Digital Signature Standard (DSS)

***Key Generation*.**

1) ***Alice chooses primes p and q such that q is a prime divisor of (p-1) .***

2) ***Alice uses <Z_p*, × > and <Z_q*, ×>.***

3) ***Alice creates e_1 to be $e^1 = e_0^{(p-1)/q} \bmod p$***

4) ***Alice chooses d and calculates $e_2 = e_1^d$.***

5) ***Alice's public key is (e_1, e_2, p, q); her private key is (d).***

3. Digital Signature Standard (DSS)

Verifying and Signing

Figure 9 ***DSS scheme***

M: Message
S_1, S_2: Signatures
V: Verification

r: Random secret
d: Alice's private key
(e_1, e_2, p, q): Alice's public key

h(M): Message digest

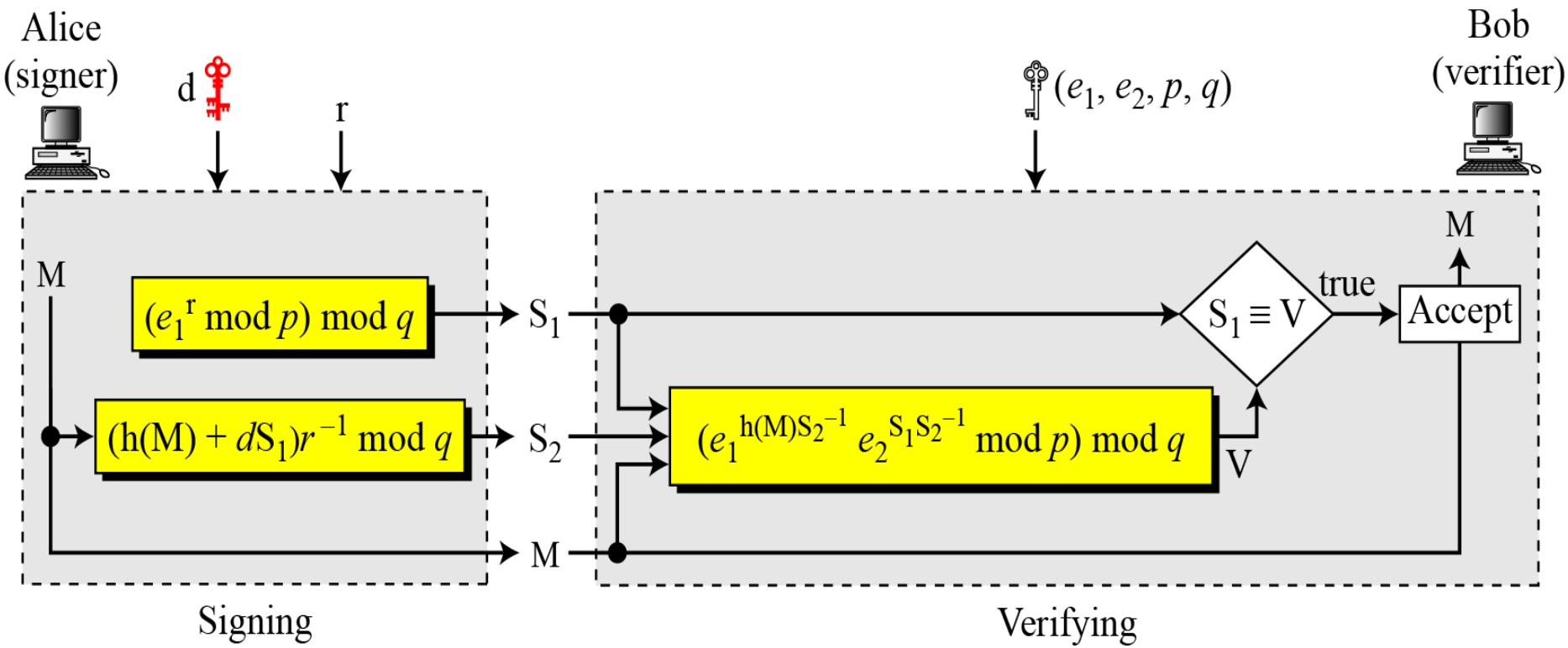

3. Digital Signature Standard (DSS)

Example 5

Alice chooses q = 101 and p = 8081. Alice *selects* e_0 = 3 and calculates $e^1 = e_0^{(p-1)/q} \bmod p$ = 6968. Alice chooses d = 61 as the private key and calculates $e_2 = e_1^d \bmod p$ = 2038. Now Alice can send a message to Bob. Assume that h(M) = 5000 and Alice chooses r = 61:

$$\mathrm{h(M)} = 5000 \qquad r = 61$$
$$\mathrm{S}_1 = (e_1{}^r \bmod p) \bmod q = 54$$
$$\mathrm{S}_2 = ((\mathrm{h(M)} + d\,\mathrm{S}_1)\, r^{-1}) \bmod q = 40$$

Alice sends M, S_1, and S_2 to Bob. Bob uses the public keys to calculate V.

$$\mathrm{S}_2{}^{-1} = 48 \bmod 101$$
$$\mathrm{V} = [(6968^{5000 \times 48} \times 2038^{54 \times 48}) \bmod 8081] \bmod 101 = 54$$

3. Digital Signature Standard (DSS)

DSS Versus RSA

Computation of DSS signatures is faster than computation of RSA signatures when using the same p.

DSS Versus ElGamal

DSS signatures are smaller than ElGamal signatures because q is smaller than p.

SERVICES

We discussed several security services including message confidentiality, message authentication, message integrity, and nonrepudiation. A digital signature can directly provide the last three; for message confidentiality, we still need encryption/decryption algorithm.

Topics discussed in this section:

1. **Message Authentication**
2. **Message Integrity**
3. **Nonrepudiation**
4. **Message Confidentiality**

1. Message Authentication

A secure digital signature scheme, like a secure conventional signature can provide message authentication.

Note

A digital signature provides message authentication.

2. Message Integrity

The integrity of the message is preserved even if we sign the whole message because we cannot get the same signature if the message is changed.

Note

A digital signature provides message integrity.

3. Nonrepudiation

Figure 4 *Using a trusted center for nonrepudiation*

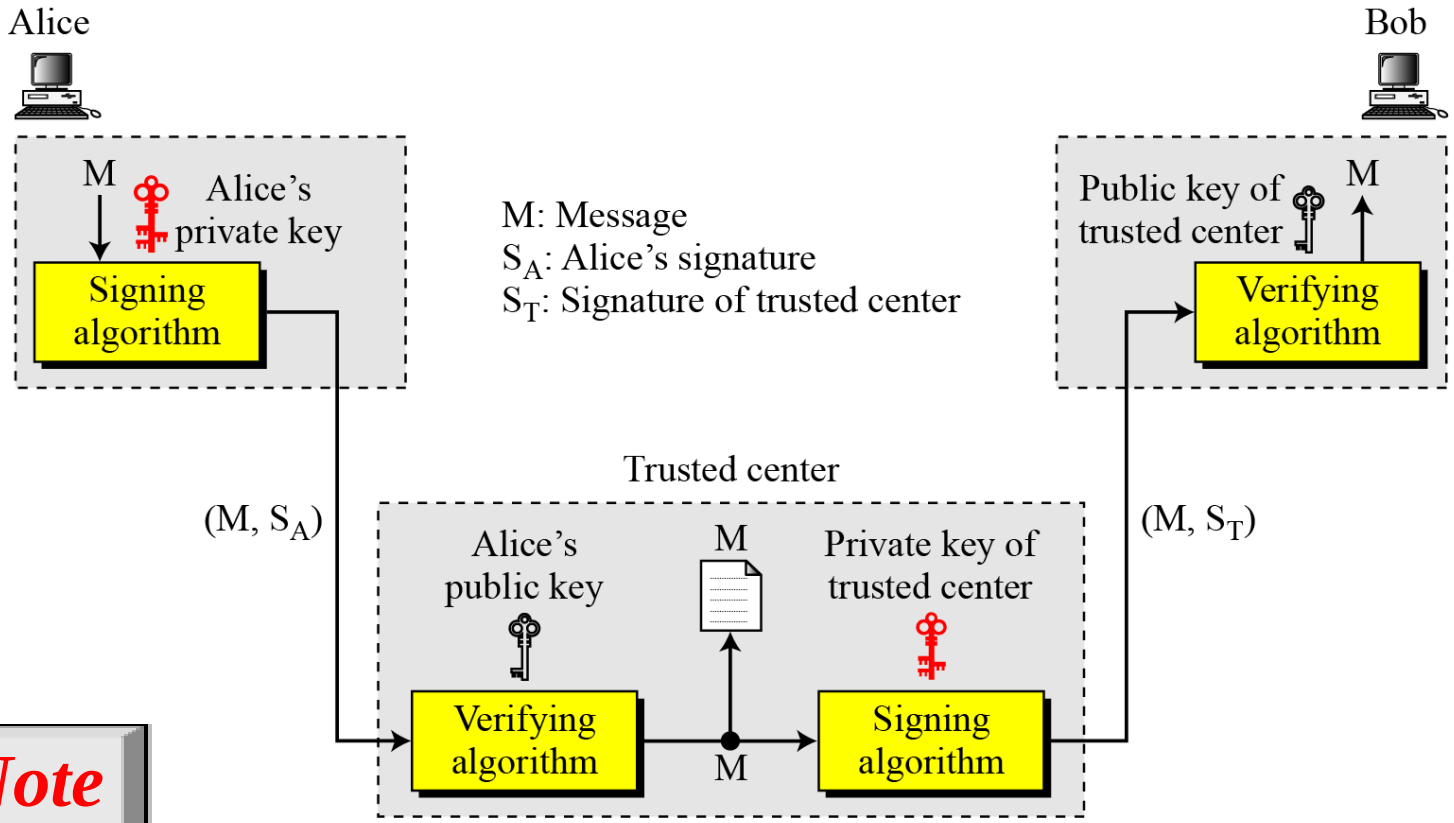

Note

Nonrepudiation can be provided using a trusted party.

4. Confidentiality

Figure 13.5 *Adding confidentiality to a digital signature scheme*

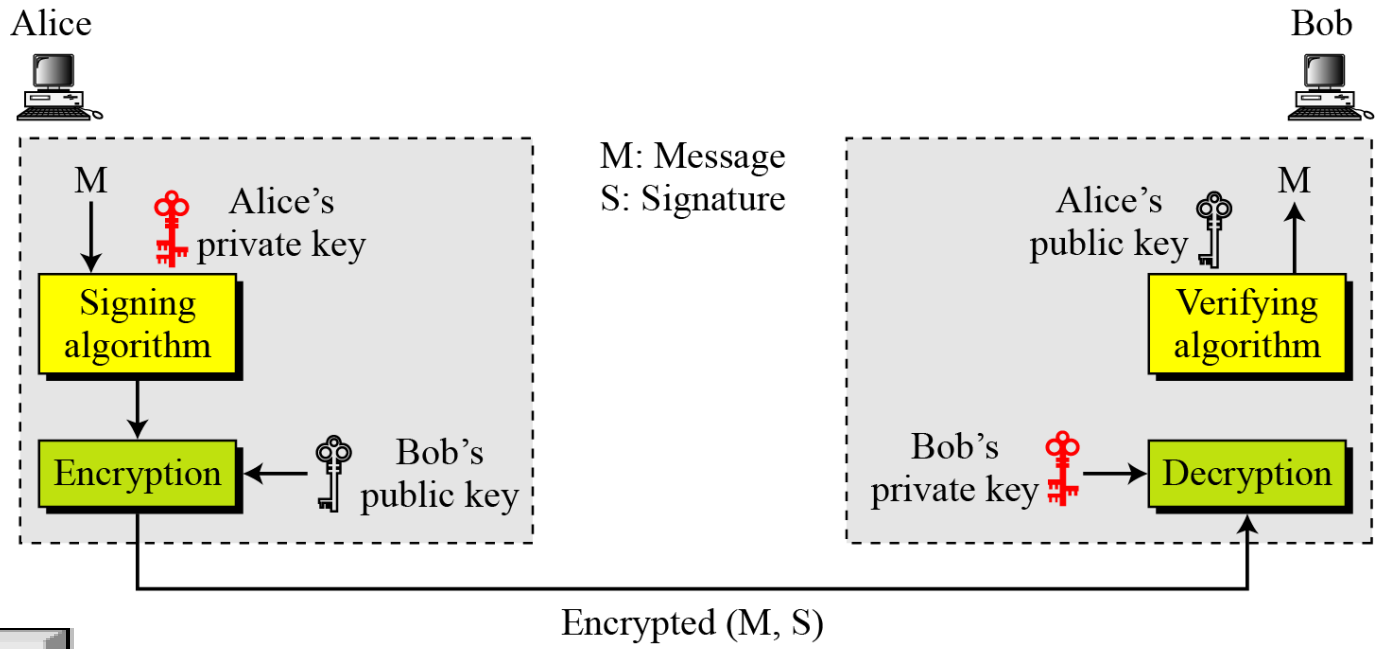

Note

A digital signature does not provide privacy. If there is a need for privacy, another layer of encryption/decryption must be applied.

ATTACKS ON DIGITAL SIGNATURE

This section describes some attacks on digital signatures and defines the types of forgery.

Topics discussed in this section:

1. **Attack Types**
2. **Forgery Types**

1. Attack Types

Key-Only Attack

Known-Message Attack

Chosen-Message Attack

2. Forgery Types

Existential Forgery

Selective Forgery